PRODUCT SHEET

Description:
Cushion For Clamp "Oval-L", 2mm, Black EPDM Rubber

Item number:
22.10.224-0

Units	Box	Carton	HS Code	Barcode
Pcs.	100	2000	4016930090	5704866083607

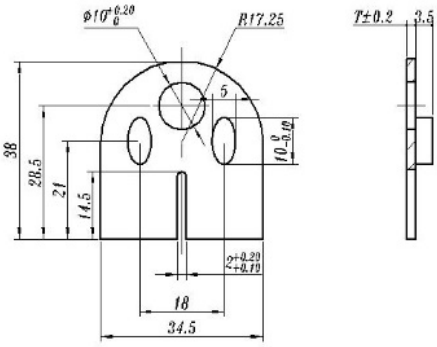

Item	T
22.10.224-0	2
22.10.225-0	3
22.10.226-0	4
22.10.227-0	5

SISO A/S
Mileparken 11
DK-2740 Skovlunde
Denmark
VAT: DK 24786013

Phone +45 45 830 900

www.siso.dk
siso@siso.dk

Danske Bank
Nytorv Branch
Copenhagen
SWIFT: DABADKKK

Account no.
4180 3112 112936
IBAN Account
DK7230003112112936